k2000 - Coaxial Noise Sources

10MHz to 40GHz

Applications Include:

- Radar warning receivers (RWR)
- Built-in test equipment (BITE)
- Military arcraft
- Automotive Radar
- Ultra-low Latency Wireless Backhaul
- 802.11ad High-Speed Wi-Fi

kTB Coaxial Noise Source

The kTB k2000 Series Coaxial Noise Source embody excellent stability with temperature and voltage. They are well suited for receiver testing, noise figure measurements, and any application requiring broad bandwidth and fast switching time.

Like all kTB noise sources, the k2000 Series features hermetically sealed noise diodes and each noise source is supplied with calibration data for the full frequency band.

General Specifications

- Noise output rise and fall times — Less than 1 µs
- Noise output variation with temperature — Less than 0.01 dB/° C
- Operating temperature — -55° to 85° C
- Storage temperature — -65° to +125° C
- Input power — +28 VDC 20 mA typical
- Noise output — 14 to 30 dB

Options

- **K2M** Male connector
- **K215** +15V bias

Model	Frequency Range	ENR (db)	Flatness (db)	VSWR	DC Bias	RF Connector
k2118A	10MHz to 18GHz	15 ± 1.5	x	2:1	+28V @20mA (max)	SMA(F)
k2218A	10MHz to 18GHz	28	± 1.5	x	+28V @20mA (max)	SMA(F)
k2318A	10MHz to 18GHz	20 to 24	x	x	+28V @20mA (max)	SMA(F)
k2201A	10MHz to 1GHz	30 to 35	± 1	x	+28V @20mA (max)	SMA(F)
k2208B	1GHz to 18GHz	23 to 27	± 1	x	+28V @20mA (max)	SMA(F)
k2240A	2GHz to 40GHz	>20	x	x	+28V @20mA (max)	2.92mm(F)

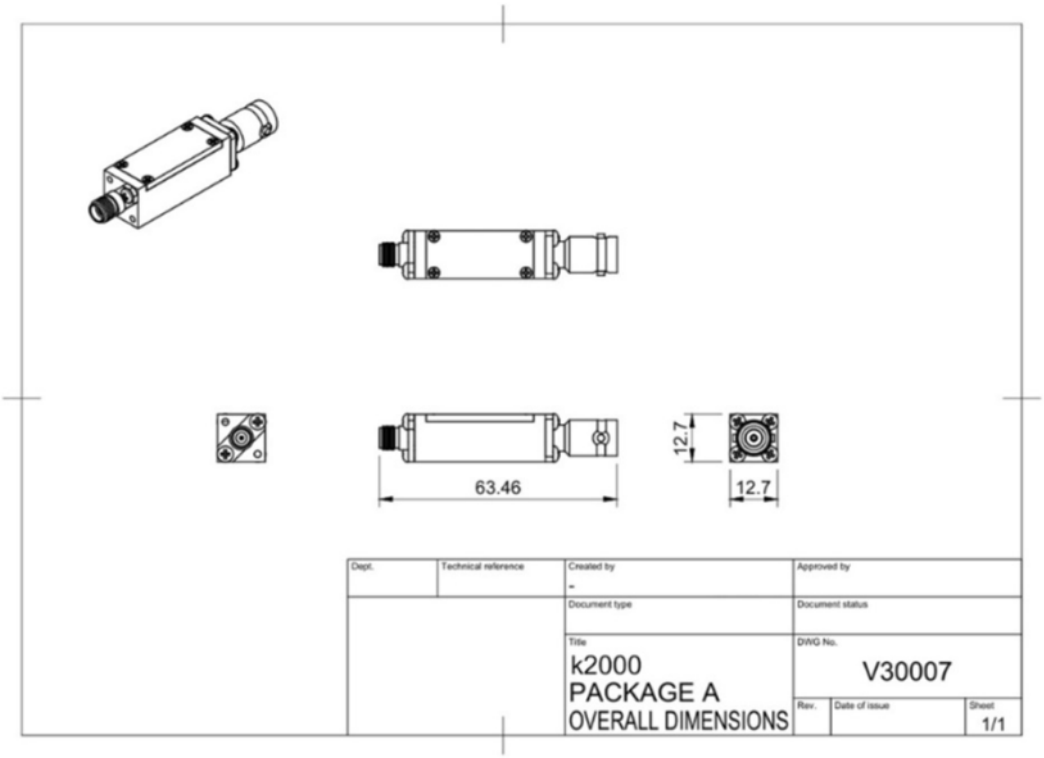

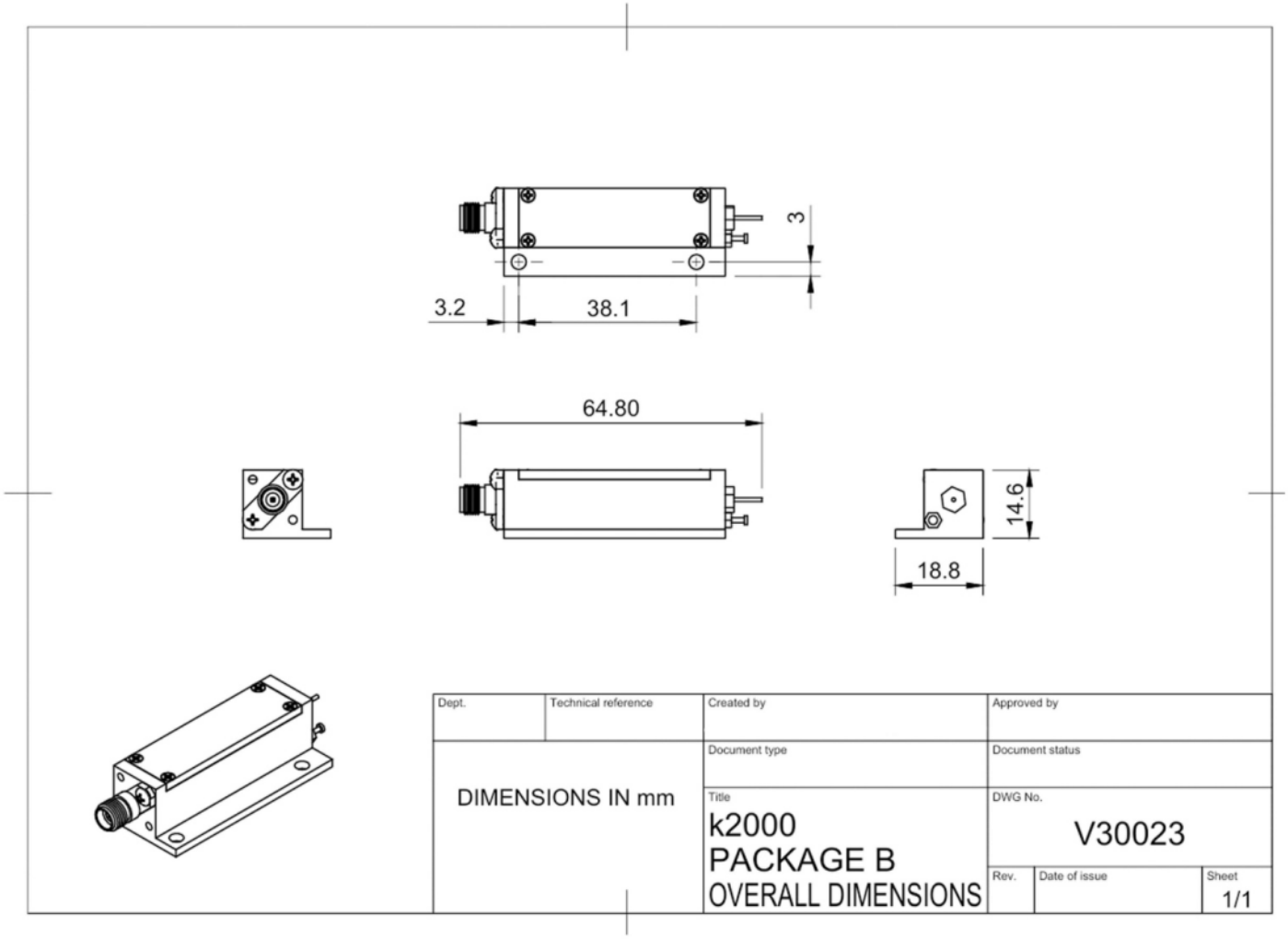

k2000 Series Dimensions

kTB SOLUTIONS INC.

1754 Technology DR STE 122
San Jose, CA, 95110, USA
TeL.: +1 650 686 1019
E-mail: sales@ktbsolutions.com
Web: www.ktbsolutions.com