Connector

NCS-FL2B-086-1

SMA Female

Features:
* Low VSWR

Applications:
* Wireless
* Radar
* Instruments
* Electronics

Electrical

Frequency:	DC~18GHz
VSWR:	1.25 max.
Impedance of Dielectric:	5000MΩ min.
Voltage Withstand:	750V DC min
Impedance:	50Ω

Mechanical

RF Connector:	SMA Female
Mating Cable:	NH280, ND086, NE086, RG316, RG316D
Outer Conductor:	Brass

How To Order

NCS-FL2B-086-1

Customization is available upon request.

Outline Drawings

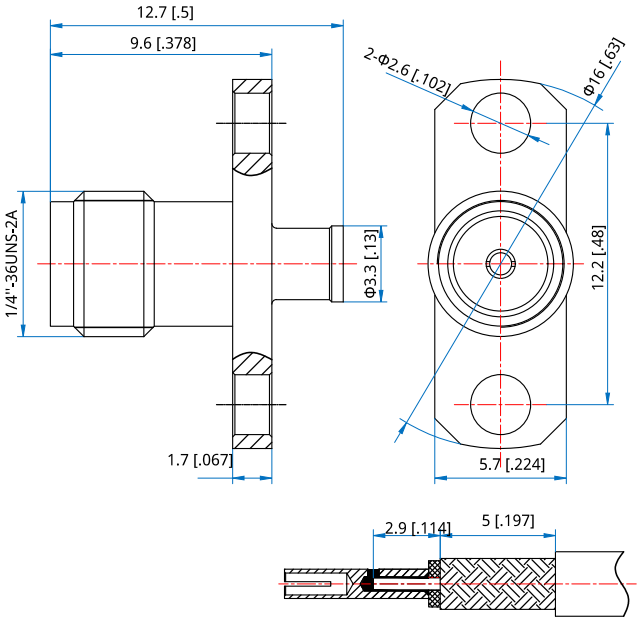

Unit: mm [in]
Tolerance: ±0.2mm [±0.008in]